Quester Tangent Corporation

Denver Regional Transportation District (Denver RTD)
Contract N8US-30-F0003

Monitoring and Diagnostic System (MDS)

Propulsion Car Monitoring Network Interface Control Document (ICD)

Prepared by: **Steve Dyck**
Hardware Team Lead

Verified by: **Christian Leclerc**
Software Team Lead

Approved by: **Greg Nuttall**
Project Engineer

Issue Date: 16 May 2012
Document Number: DDN-0432-00085
Revision: R03

Making Data Intelligent™

DATE	REVISION	DESCRIPTION
09-Sept-2011	R00	Initial version
08-Nov-2011	R01	Add information from Melco in tables 1, 4, 5 and 6.
15-Dec-2011	R02	Table 6 – Remove index 296.
16-May-2012	R03	Update table 3 to include phase shift information

COPYRIGHT

Copyright © 2012 by Quester Tangent Corporation. All rights reserved. This item and the information contained herein are the property of Quester Tangent Corporation. No part of this document may be reproduced, transmitted, stored in a retrieval system, or translated into any language or computer language in any form or by any means, electronic, mechanical, magnetic, optical, chemical, manual, or otherwise, without the express written permission of Quester Tangent Corporation.

Quester Tangent Corporation
6582 Bryn Road
Saanichton, BC, Canada V8M 1X6
Tel: 250-656-6677
Fax: 250-655-4696
www.questertangent.com

Table of Contents

1 Introduction 5
2 Network Physical Layer Interface Design 5
3 Network Management 5
3.1 Node Documentation 5
3.1.1 Node Self-Documentation String 5
3.1.2 Node Program ID 5
4 Network Node 6
4.1 Node Object – Object #0 6
4.1.1 nvi00ObjRequest 6
4.1.2 nvo00ObjStatus 7
4.1.3 nvi00TimeStamp 7
4.1.4 nvi00FileReq 7
4.1.5 nvo00FileStat 7
4.1.6 nvi00CDTCommand 7
4.1.7 nci00NetConfig 8
4.2 Monitoring Object – Object #1 8
4.2.1 nvi01Subscribe 8
4.2.2 nvo01StatusBits 9
4.2.3 nvo01StatusBits2 9
4.2.4 nvo01Parameter 9
4.2.5 nvi01CDTParam 9
4.2.6 nvi01TransfState 10
4.3 SCI Update Object – Object #2 10
4.3.1 nvi02SCIUpdReq 10
4.3.2 nvo02SCIUpdResp 10
4.4 SCI Version Object – Object #3 10
4.4.1 nvi03SCIVersReq 10
4.4.2 nvo03SCIVersion 11
5 Network Interface 12
5.1 General 12
5.2 Subsystem Specific Network Interface Declarations 12
5.2.1 UNVT_CDT_command 12
5.3 Software Update 12
5.4 File Transfers 12
5.4.1 Log File Transfer Details 14
5.4.2 SCI Update File Transfer Details 14
6 Self-Installation Data 19
6.1 Domain Configuration 19

6.2 Location Configuration 19
6.3 Address Configuration 19
6.4 Network Variable Configuration 20

List of Tables

Table 1: Propulsion System – Network Physical Layer Interface Design 5
Table 2: CDT Commands 7
Table 3: Parameter Data Required from CDT 9
Table 4: SCI Index Number Assignment 10
Table 5: SCI Information 11
Table 6: File Transfers 12
Table 7: Address Table 19
Table 8: Network Variable Configuration 20

List of Figures

Figure 1: Propulsion Node 6
Figure 2: Propulsion Log File Transfer Protocol 14
Figure 3: Propulsion SCI Update Protocol 17

1 Introduction

This document defines the Propulsion subsystem specific interface to the MDS car monitoring network described in the MDS Car Monitoring Network ICD (DDN-0432-0080).

This document is intended as the main tool for development and integration of the Propulsion subsystem onto the train for the supplier as well as for Hyundai-Rotem and Quester Tangent.

Information contained in this document is essential to the supplier in order to complete the software that will implement the MDS Car Monitoring Network interface. For this reason, any updates of the information contained in this document will be made available to the supplier with the shortest possible delay.

2 Network Physical Layer Interface Design

Table 1 documents the Propulsion subsystem's network physical layer interface design. This conforms to the MDS Car Monitoring Network ICD Section 4 requirements.

Table 1: Propulsion System – Network Physical Layer Interface Design

Feature	Subsystem Info	Notes
Network processor	TMPN3150B1AFG	
Transceiver type	FFT-10A	
LEDs (Tx, Rx, Service)	Yes	Mounted on the front panel of the GCU
Service pushbutton	Yes	Mounted on front panel of the GCU
Common mode isolation choke	Yes	TTI7570
Magnetic shield	Yes	
Surge absorbing flash tubes	Yes	DSP-301N-S00B
Submit subsystem network interface design for review by QT?	Yes	

3 Network Management

The subsystem shall be capable of self-installation, i.e. set the system's own network configuration without intervention by a network management tool. Full details of the required settings are provided in the current version of the MDS Car Monitoring Network ICD document (DDN-0432-0080) and in this document.

All nodes shall support possible future usage of a network management tool, as described in the MDS Car Monitoring Network ICD document.

3.1 Node Documentation

3.1.1 Node Self-Documentation String

The Neuron C source code declaration shall be:

```
#pragma set_node_sd_string "PROP, Mitsubishi Electric, PPPP, DDDD"
```

PPPP: Supplier part number.

DDDD: Neuron SCI revision date (yyyy-mm-dd).

3.1.2 Node Program ID

The Neuron C source code declaration shall be:

```
#pragma set_id_string "PROP"
```

4 Network Node

Figure 1 shows the Propulsion Node functional blocks, network variables and configuration properties. The following subsections provide network variable and configuration property details.

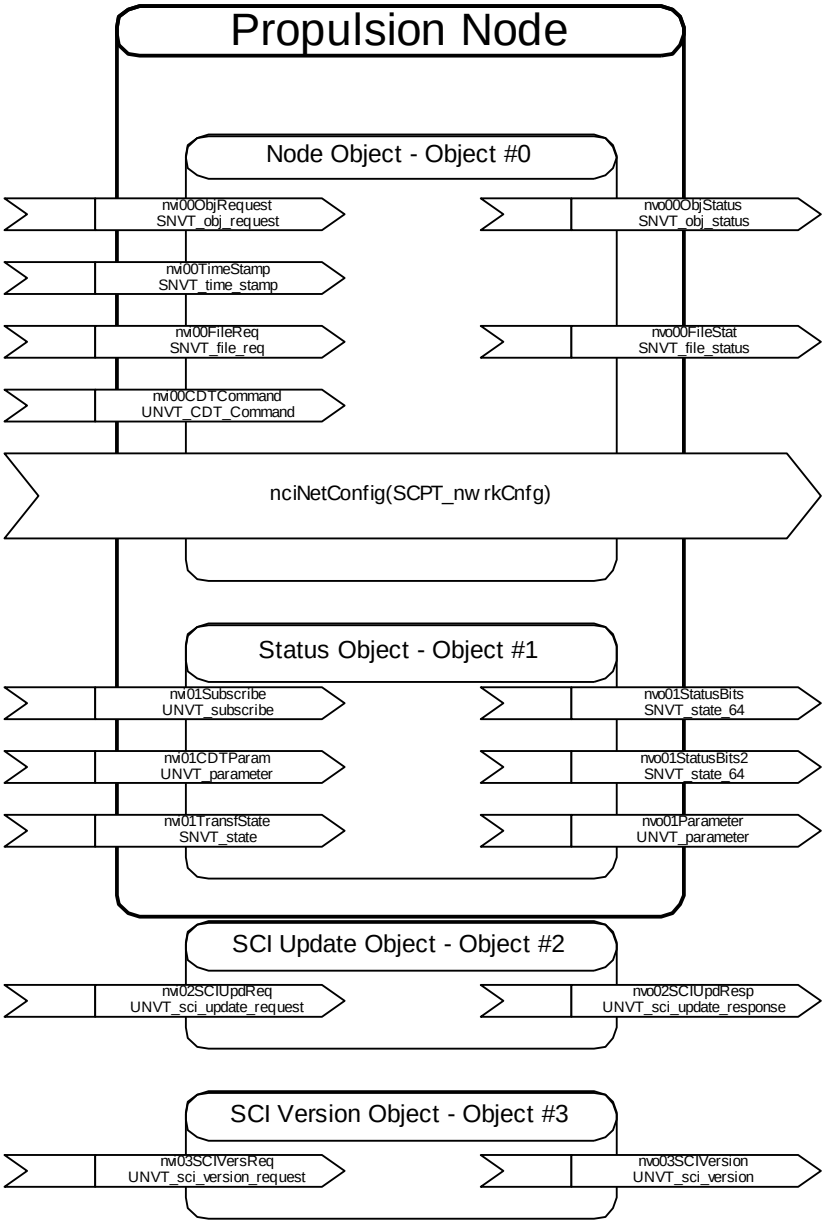

Figure 1: Propulsion Node

4.1 Node Object – Object #0

4.1.1 nvi00ObjRequest

Declaration: network input sd_string("@0|1") SNVT_obj_request nvi00ObjRequest

Description: Mandatory variable defined in LonMark Functional Profile: Node Object, LonMark SNVT Master List. This input variable provides the mechanism to request a particular mode for the node as a whole.

4.1.1.1 Data Value

Refer to the SNVT Master List and DDN-0432-0080 for request types supported.

4.1.2 nvo00ObjStatus

Declaration: network output sd_string("@0|2") SNVT_obj_status nvo00ObjStatus

Description: Mandatory variable defined in LonMark Functional Profile: Node Object, LonMark SNVT Master List. This output variable reports the general status of the node.

Destination: CDT

4.1.2.1 Data Value

Refer to the SNVT Master List and DDN-0432-0080 for status items supported.

4.1.3 nvi00TimeStamp

Declaration: network input sd_string("@0|3") SNVT_time_stamp nvi00TimeStamp

Description: Another subsystem shall provide the current UTC time to all other subsystems (T.S. 9.9). The CDT may also transmit this variable.

4.1.3.1 Data Value

Current time in UTC format.

4.1.4 nvi00FileReq

Declaration: network input sd_string("@0|4") SNVT_file_req nvi00FileReq

Description: Receives requests from the CDT used to control file transfer of a new software image or trace file transfer.

4.1.4.1 Data Value

See DDN-0432-0080 section 7.2.

4.1.5 nvo00FileStat

Declaration: network output sd_string("@0|5") SNVT_file_status nvo00FileStat

Description: Sends file transfer status to the CDT during transfer of a new software image or trace file transfer.

Destination: CDT

4.1.5.1 Data Value

See DDN-0432-0080 section 7.2.

4.1.6 nvi00CDTCommand

Declaration: network input sd_string("@0|6") UNVT_CDT_command nvi00CDTCommand

Description: Used by the CDT to clear all trace files. See section 5.2.1 for the UNVT_CDT_command variable structure.

4.1.6.1 Data Value

The following table defines the commands sent by the CDT to the Propulsion subsystem.

Table 2: CDT Commands

ID	CDTCommand	Argument	Notes
2	Clear Trace Files	0	Clear all trace files: History data, trace data and high speed trace data.

ID	CDTCommand	Argument	Notes
2	Initiate Self Test	1	

All other nvi00CDTCommand values shall be ignored.

4.1.7 nci00NetConfig

Declaration: config network input sd_string("&0,,0\x90,25;") SCPTnwrkCnfg nci00NetConfig

Description: All nodes must support self-installation and provide a configuration property to allow a network tool to override the node's self-installation procedure. If the value of this variable is set to CFG_EXTERNAL when the node is reset or powers up, then the node shall not execute any of its self-installation functions. See DDN-0432-0080 section 6.3.5 for details.

4.1.7.1 Preset Value

This variable shall be initialized to CFG_LOCAL when subsystem software is reloaded and when units are delivered from the factory.

4.2 Monitoring Object – Object #1

4.2.1 nvi01Subscribe

Declaration: network input sd_string("@1|1") UNVT_subscribe nvi01Subscribe

Description: Used by the CDT to set the required transmission rate for monitoring data sent to the CDT.

4.2.1.1 Data Value

See DDN-0432-0080 section 6.5.3.

4.2.2 nvo01StatusBits

Declaration: network output sd_string("@1|2") SNVT_state_64 nvo01StatusBits

Description: Current subsystem status.

Destination: CDT

4.2.2.1 Data Value

The Diagnostics Data Dictionary defines the status bit assignments and associated attributes for bits 0–55. Bits 56–63 represent a counter.

4.2.3 nvo01StatusBits2

Declaration: network output sd_string("@1|3") SNVT_state_64 nvo01StatusBits2

Description: Current subsystem status.

Destination: CDT

4.2.3.1 Data Value

The Diagnostics Data Dictionary defines the status bit assignments and associated attributes for bits 0–55. Bits 56–63 represent a counter.

4.2.4 nvo01Parameter

Declaration: network output sd_string("@1|4") UNVT_parameter nvo01Parameter

Description: Current numeric parameter value.

Destination: CDT

4.2.4.1 Data Value

The Diagnostics Data Dictionary defines the numeric parameter ID assignments and associated attributes.

4.2.5 nvi01CDTParam

Declaration: network output sd_string("@1|5") UNVT_parameter nvi01CDTParam

Description: Current numeric parameter value.

4.2.5.1 Data Value

The following table defines the numeric parameter ID assignments.

Table 3: Parameter Data Required from CDT

ID	DESCRIPTION	UNITS	TRANSMISSION RATE (NOTE 1)	SCALE	OFFSET
1	Car speed	mph	2 sec	1	0
2	HVAC-A Temperature: Fresh Air(Exterior)	Degree F	30 sec	1	-40
5	Car Number		30 sec	1	0
6	Train Configuration		2 sec	1	0
7	C/I Position		2 sec	1	0
8	Other C/I Fault		2 sec	1	0
TBD	Spare5	TBD	TBD		
TBD	Spare6	TBD	TBD		
TBD	Spare7	TBD	TBD		

Note 1: Maximum transmission rate set by CDT supplier.

4.2.6 nvi01TransfState

Declaration: network input sd_string("@1|6") SNVT_state nvi01TransfState

Description: Used by CDT to suspend network traffic during file transfer operations.

4.2.6.1 Data Value

See DDN-0432-0080 section 6.5.7.

4.3 SCI Update Object – Object #2

4.3.1 nvi02SCIUpdReq

Declaration: network input sd_string("@2|1") UNVT_sci_update_request nvi02SCIUpdReq

Description: Used by CDT to request SCI update.

4.3.1.1 Data Value

See DDN-0432-0080 section 6.6.1 and section 5.4.2 of this document.

4.3.2 nvo02SCIUpdResp

Declaration: network output sd_string("@2|2") UNVT_sci_update_response nvo02SCIUpdResp

Description: Used by subsystem to respond to CDT update requests.

Destination: CDT

4.3.2.1 Data Value

See DDN-0432-0080 section 6.6.2 and section 5.4.2 of this document.

4.4 SCI Version Object – Object #3

To check the software version of each SCI, the following data are transferred between the CDT and the propulsion converter/inverter system.

4.4.1 nvi03SCIVersReq

Declaration: network input sd_string("@3|1") UNVT_sci_version_request nvi03SCIVersReq

Description: Used by CDT to request SCI version information. SCI identified by index number.

4.4.1.1 Data Value

The following table defines the SCI index number assignments.

Table 4: SCI Index Number Assignment

SCI INDEX	SCI NAME	UPDATE FROM CDT?
1	Sequence control, torque command and monitoring processing except for Secor.26 (SYS)	Yes
2	Converter command control (CVF)	Yes
3	Inverter command control (IVF)	Yes
4	LON-WORKS communication (LON)	No
5	Parameter change area from PTU, only Secor.26 in SYS (SYS26)	Yes
6	On board testing	Yes

4.4.2 nvo03SCIVersion

Declaration: network output sd_string("@3|2") UNVT_sci_version nvo03SCIVersion

Description: Populated by subsystem with requested SCI version information.

Destination: CDT

4.4.2.1 Data Value

Table 5: SCI Information

SCI INDEX	SCI NAME	SCI TYPE (NOTE 1)	SCI NAME (8 CHAR)
1	Sequence control, torque command and monitoring processing except for Secor.26 (SYS)	1	SYS
2	Converter command control (CVF)	1	CVF
3	Inverter command control (IVF)	1	IVF
4	LON-WORKS communication (LON)	3	LON
5	Parameter change area from PTU, only Secor.26 in SYS (SYS26)	1	SYS26
6	On board testing	1	TST

Note 1: See DDN-0432-0080 (Section 6.7.2 nvoSCIVersion) for details.

5 Network Interface

5.1 General

The Propulsion subsystem complies with the general monitoring scheme defined in DDN-0432-0080 section 6.

5.2 Subsystem Specific Network Interface Declarations

Declarations in this section use Neuron C conventions, i.e. 'short' is an 8-bit value, 'long' is 16-bits and 'quad' is 32-bits.

5.2.1 UNVT_CDT_command

UNVT_CDT_command structure declaration:

```
typedef struct {
      unsigned short    command_id;
      unsigned long     command_arg;
} UNVT_CDT_command;
```

Field descriptions:

- command_id: Identifies the command that is being sent; its valid range is 1 to 255. A value of 0 shall not be used.
- command_arg: Optional argument to the command. It shall be set to 0 if the argument is unused.

5.3 Software Update

Subsystem supplier shall review DDN-0432-0080 and provide feedback on SCI update requirements, i.e. is system reset required, what metadata is required by subsystem to verify the SCI file transfer, etc.

5.4 File Transfers

Table 6: File Transfers

Index	File Type	Sender	Receiver	Initiator	Notes
260	SCI Update - SYS Sec 00	CDT	PROP	CDT	
261	SCI Update - SYS Sec 01	CDT	PROP	CDT	
262	SCI Update - SYS Sec 02	CDT	PROP	CDT	
263	SCI Update - SYS Sec 03	CDT	PROP	CDT	
264	SCI Update - SYS Sec 04	CDT	PROP	CDT	
265	SCI Update - SYS Sec 05	CDT	PROP	CDT	
266	SCI Update - SYS Sec 06	CDT	PROP	CDT	
267	SCI Update - SYS Sec 07	CDT	PROP	CDT	
268	SCI Update - SYS Sec 08	CDT	PROP	CDT	
269	SCI Update - SYS Sec 24	CDT	PROP	CDT	
270	SCI Update - SYS Sec 25	CDT	PROP	CDT	
271	SCI Update - SYS Sec 26	CDT	PROP	CDT	
280	SCI Update - IVF Sec 00	CDT	PROP	CDT	
281	SCI Update - IVF Sec 01	CDT	PROP	CDT	
282	SCI Update - IVF Sec 02	CDT	PROP	CDT	
283	SCI Update - IVF Sec 03	CDT	PROP	CDT	

Index	File Type	Sender	Receiver	Initiator	Notes
284	SCI Update - IVF Sec 04	CDT	PROP	CDT	
285	SCI Update - IVF Sec 05	CDT	PROP	CDT	
286	SCI Update - IVF Sec 06	CDT	PROP	CDT	
290	SCI Update - CVF Sec 00	CDT	PROP	CDT	
291	SCI Update - CVF Sec 01	CDT	PROP	CDT	
292	SCI Update - CVF Sec 02	CDT	PROP	CDT	
293	SCI Update - CVF Sec 03	CDT	PROP	CDT	
294	SCI Update - CVF Sec 04	CDT	PROP	CDT	
295	SCI Update - CVF Sec 05	CDT	PROP	CDT	
311	Failure history data	PROP	CDT	CDT	1) Sampling time: None (This data is instant data as Protection detected.) 2) Recording number: 256 data 3) Trace data size per 1datum: 32bytes 4) Trace data size per 256 data: 8,192 bytes 5) Contents of Failure history data: TBD (All digital signals)
312	Normal speed trace data 1	PROP	CDT	CDT	1) Sampling time: 1msec 2) Recording number: 9 data 3) Trace time: - 700ms/0ms/300ms, Total: 1sec 4) Trace data size per 1 datum: 54061 bytes 5) Trace data size per 9 data: 486549 bytes 6) Contents of Normal speed data: TBD (Digital signal:12 bytes, Analog signal:42 byte per 1 datum)
313	Normal speed trace data 2	PROP	CDT	CDT	
314	Normal speed trace data 3	PROP	CDT	CDT	
315	Normal speed trace data 4	PROP	CDT	CDT	
316	Normal speed trace data 5	PROP	CDT	CDT	
317	Normal speed trace data 6	PROP	CDT	CDT	
318	Normal speed trace data 7	PROP	CDT	CDT	
319	Normal speed trace data 8	PROP	CDT	CDT	
320	Normal speed trace data 9	PROP	CDT	CDT	
321	High speed trace data 1	PROP	CDT	CDT	1) Sampling time: 20µs 2) Recording number: 7 data 3) Trace time: - 122.88ms/0ms/40.96ms, Total: 163.84msec 4) Trace data size per 1datum: 262144 bytes 5) Trace data size per 7data: 1835008 bytes 6) Contents of High speed data: TBD
322	High speed trace data 2	PROP	CDT	CDT	

Index	File Type	Sender	Receiver	Initiator	Notes
323	High speed trace data 3	PROP	CDT	CDT	
324	High speed trace data 4	PROP	CDT	CDT	
325	High speed trace data 5	PROP	CDT	CDT	
326	High speed trace data 6	PROP	CDT	CDT	
327	High speed trace data 7	PROP	CDT	CDT	
328	Self-Test results	PROP	CDT	CDT	For on-board testing from the car

5.4.1 Log File Transfer Details

The Propulsion subsystem indicates trace files are available for download to the PTU by setting the appropriate nvo01StatusBits2 to one (1). Refer to section 4.2.3 for status bit index information. The CDT shall use the Echelon file transfer protocol to transfer files from the Propulsion subsystem to the PTU as shown in Figure 2. The individual trace files are distinguished by the file index numbers noted in Table 6.

The CDT shall request trace files to be cleared using the nvi00CDTCommand network variable as described in section 4.1.6.

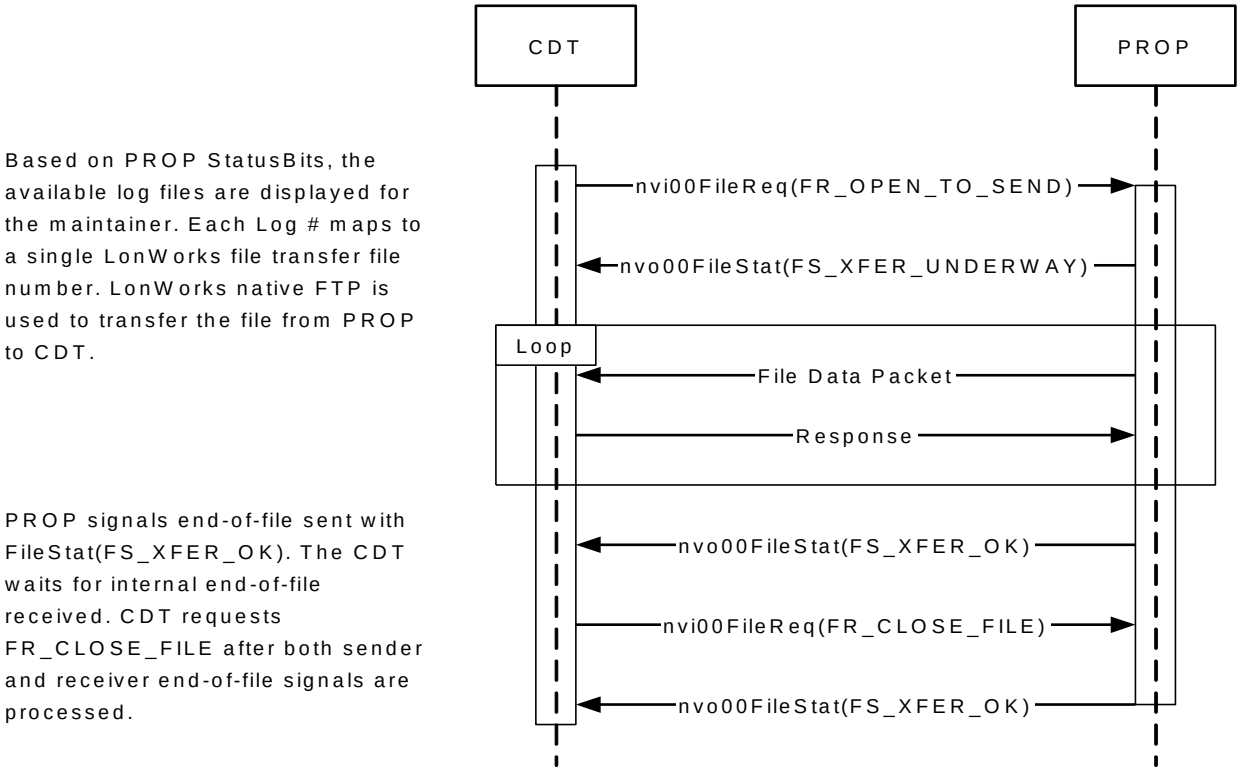

Figure 2: Propulsion Log File Transfer Protocol

5.4.2 SCI Update File Transfer Details

The PROP SCIs that can be updated via the CDT are composed of multiple parts identified as sectors. The update of a single SCI requires the transfer of multiple files from the PTU to the propulsion unit. The subsystem supplier provides a single image information file for the SCI update and multiple sector files for transfer from the PTU. The image information file format documented in DDN-0432-0080 section 7.3.1 is expanded in the following section to accommodate the propulsion SCI update.

5.4.2.1 Propulsion Specific Image Information File

The propulsion image information file is multiple lines; the first line in the file provides information for the SCI as a whole and the remaining lines provide information for each file included in the transfer.

```
Subsystem name,SCI Index,SCI name,SCI version,Image checkvalue,Image size,Reboot?
File Index, File Name, File checkvalue, File Size
File Index, File Name, File checkvalue, File Size
File Index, File Name, File checkvalue, File Size
File Index, File Name, File checkvalue, File Size
…
```

Where:

Subsystem name:	PROP
SCI Index:	Index for the particular SCI
SCI name:	up to 8 alphanumeric characters
SCI version:	up to 8 alphanumeric characters
Image checkvalue:	SCI image verification code (up to 32 bit Hex)
Image size:	SCI image length in bytes defined as a Hex value
Reboot?	Always set to "Y" for PROP
File Index:	Integer file number (as per column 1 in Table 6)
File Name:	File name (without path) containing file image to send
File checkvalue:	File verification code (up to 32 bit Hex)
File size:	File length in bytes defined as a Hex value

Note: The Image check value and Image size may be left blank if the File check values and sizes are sufficient to verify that the image was sent without error.

Note: The CDT uses the File size values to update the progress bar displayed to the operator and so should always be specified.

Example file (with Image check value and size):

```
PROP,3,INF,2E,5FC2447A,C000,Y<CR><LF>
280, Tmv00.DAT, 54AF2567, 2000
281, Tmv01.DAT, F32AA3BB, 2000
282, Tmv02.DAT, 181324EE, 2000
283, Tmv03.DAT, 16CDEF12, 2000
284, Tmv04.DAT, 43AE5462, 2000
285, Tmv05.DAT, 35A4D231, 2000
```

Example file (without Image check value and size):

```
PROP,3,INF,2E,,,Y<CR><LF>
280, Tmv00.DAT, 54AF2567, 2000
281, Tmv01.DAT, F32AA3BB, 2000
282, Tmv02.DAT, 181324EE, 2000
283, Tmv03.DAT, 16CDEF12, 2000
284, Tmv04.DAT, 43AE5462, 2000
285, Tmv05.DAT, 35A4D231, 2000
```

5.4.2.2 Propulsion Specific SCI Update File Transfer Protocol

Figure 3 shows the sequence of signals between the CDT and PROP systems on the MDS car monitoring network for SCI updates. The Propulsion specific SCI update differs from the general SCI update transfer in sending multiple files (sectors) for each SCI update instead of a single file.

The control of individual sector file transfers uses the SCIUpdateReq and SCIUpdateResp network variables. The CDT signals the PROP subsystem for an SCI update by sending SCIUpdateReq with request value = 1 (see DDN-0432-0080 section 6.6.1) and Image information catalogued in the .inf file described in section 5.4.2.1. The PROP subsystem responds to indicate acceptance of the SCI update as described in

DDN-0432-0080 section 6.6.2. The CDT sends a sector file to the PROP subsystem with the file indices identified in Table 6 and the LonWorks standard file transfer protocol.

After both the CDT and PROP subsystem signal end of file and acknowledge the FR_CLOSE_FILE signal, the CDT signals the PROP subsystem to install the sector file by sending SCIUpdateReq with request value = 2 (see DDN-0432-0080 section 6.6.1) and the sector checkvalue. The CDT will wait 10 seconds for the PROP subsystem to install the sector file and respond with SCIUpdateResp. If the PROP does not respond or indicates a failure, the CDT aborts the SCI update.

Following sector installation, the CDT repeats sending SCIUpdateReq with request value = 1 (see DDN-0432-0080 section 6.6.1) and Image information catalogued in the .inf file described in section 5.4.2.1. Then, the CDT sends the next sector file. If all sector files are successfully installed by the PROP subsystem, then the CDT sends SCIUpdateReq with request value = 3 (see DDN-0432-0080 section 6.6.1) and the PROP subsystem completes installation of the SCI and reboots.

The CDT does not perform retries on transfer failures. If the CDT times out waiting for a response, or receives an SCIUpdateResp indicating that the initiation or installation was refused, then it will immediately abort the SCI update.

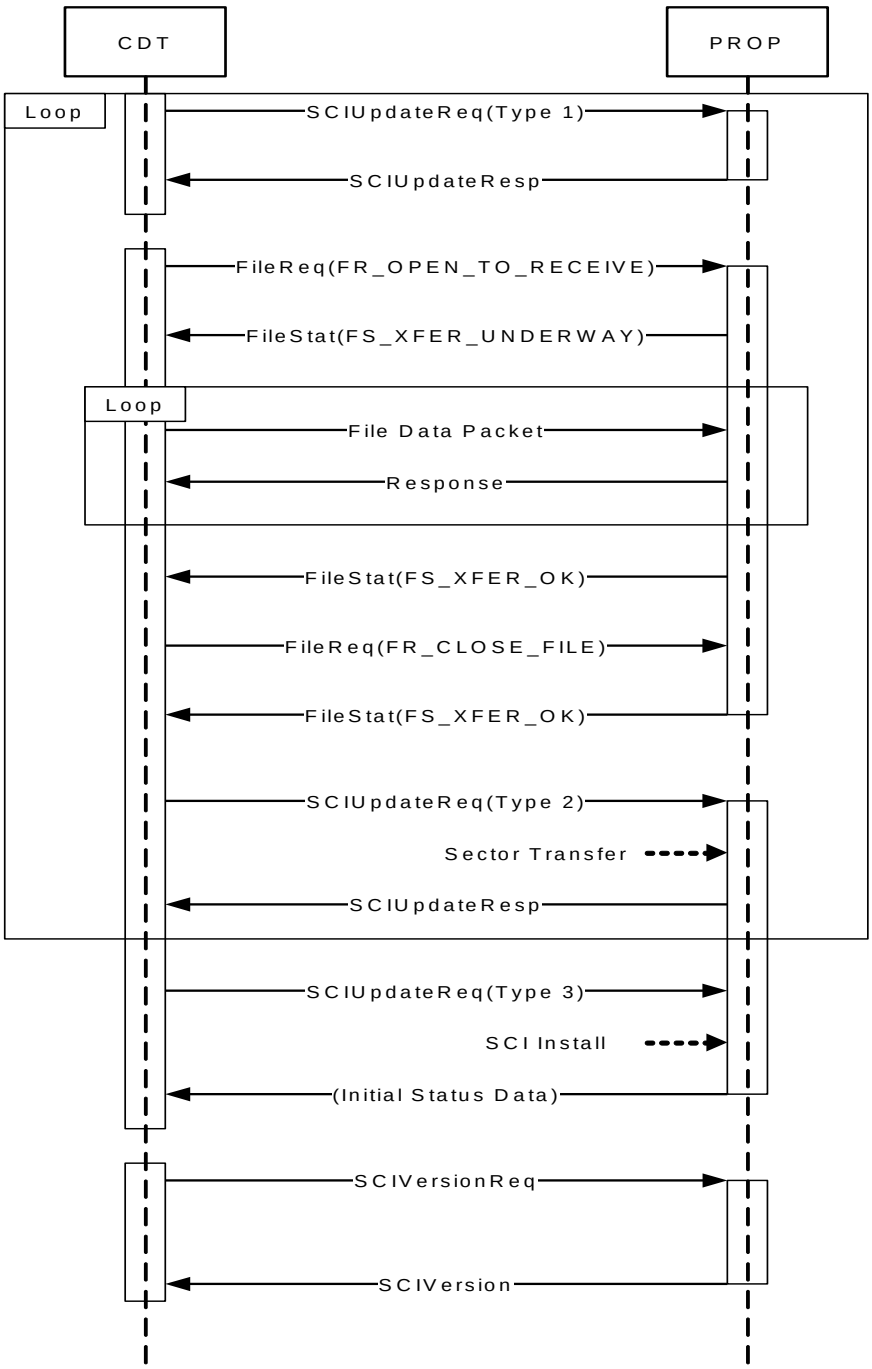

Figure 3: Propulsion SCI Update Protocol

The values in the SCIUpdateReq network variable are set as follows:

For request = 1 and 3:

- sci_index = SCI Index
- sci_name = SCI name
- sci_ver = SCI version
- checkvalue = Image checkvalue
- filesize = Image size

For request = 2:

- sci_index = File index
- sci_name = Unused (set to all zeroes)
- sci_ver = Unused (set to all zeroes)
- checkvalue = File checkvalue
- filesize = File size

6 Self-Installation Data

The following tables define data needed to configure the node's network image to support self-installation.

6.1 Domain Configuration

Refer to DDN-0432-0080 section 5.1 for domain configuration details.

6.2 Location Configuration

The location string shall be updated by the subsystem after power-up according to its physical installation location.

The Neuron C source code configuration data declaration shall include:

```
config_data.location[0] = 'P';
config_data.location[1] = 'R';
config_data.location[2] = 'O';
config_data.location[3] = 'P';
config_data.location[4] = ' ';
```

For Car A:

```
config_data.location[5] = 'A';
```

For Car B:

```
config_data.location[5] = 'B';
```

6.3 Address Configuration

Table 7: Address Table

ENTRY	TYPE	DOMAIN	NODE	REPEAT TIMER	RETRY	RECEIVE TIMER	TRANSMIT TIMER	SUBNET
0	1	0	1	0	3	0	4	1
1	1	0	1	0	3	0	4	2
2	0	0	0	0	0	0	0	0
3	0	0	0	0	0	0	0	0
4	0	0	0	0	0	0	0	0
5	0	0	0	0	0	0	0	0
6	0	0	0	0	0	0	0	0
7	0	0	0	0	0	0	0	0
8	0	0	0	0	0	0	0	0
9	0	0	0	0	0	0	0	0
10	0	0	0	0	0	0	0	0
11	0	0	0	0	0	0	0	0
12	0	0	0	0	0	0	0	0
13	0	0	0	0	0	0	0	0
14	0	0	0	0	0	0	0	0

6.4 Network Variable Configuration

Table 8: Network Variable Configuration

ENTRY	VARIABLE	DIRECTION	PRIO	SERVICE	CAR A		CAR B	
					SELECTOR (NOTE 1)	ADDRESS INDEX	SELECTOR (NOTE 1)	ADDRESS INDEX
0	nci00NetConfig	0 (IN)	0	ACKD	0x0216	0x0F	0x0296	0x0F
1	nvi00ObjRequest	0 (IN)	0	ACKD	0x0201	0x0F	0x0281	0x0F
2	nvo00ObjStatus	1 (OUT)	0	ACKD	0x0202	0x00	0x0282	0x01
3	nvi00TimeStamp	0 (IN)	0	UNACKD_RPT	0x0803	0x0F	0x0803	0x0F
4	nvi00FileReq	0 (IN)	0	ACKD	0x0204	0x0F	0x0284	0x0F
5	nvo00FileStat	1 (OUT)	0	ACKD	0x0205	0x00	0x0285	0x01
6	nvi00CDTCommand	0 (IN)	0	ACKD	0x0211	0x00	0x0291	0x01
7	nvi01Subscribe	0 (IN)	0	ACKD	0x0206	0x0F	0x0286	0x0F
8	nvi01CDTParam	0 (IN)	0	UNACKD	0x0107	0x0F	0x0187	0x0F
9	nvi01TransfState	0 (IN)	0	UNACKD	0x0109	0x0F	0x0109	0x0F
10	nvo01StatusBits	1 (OUT)	0	ACKD	0x020A	0x00	0x028A	0x01
11	nvo01StatusBits2	1 (OUT)	0	ACKD	0x020B	0x00	0x028B	0x01
12	nvo01Parameter	1 (OUT)	0	UNACKD	0x020C	0x00	0x028C	0x01
13	nvi02SCIUpdReq	0 (IN)	0	ACKD	0x020D	0x0F	0x028D	0x0F
14	nvo02SCIUpdResp	1 (OUT)	0	ACKD	0x020E	0x00	0x028E	0x01
15	nvi03SCIVersReq	0 (IN)	0	ACKD	0x020F	0x0F	0x028F	0x0F
16	nvo03SCIVersion	1 (OUT)	0	ACKD	0x0210	0x00	0x0290	0x01

Note 1: Bit 7 (bit mask 0x0080) of the variable selector is set to zero (0) for car A and set to one (1) for car B.

Note 2: Turnaround and Authentication are set to zero (0) for all variable listed